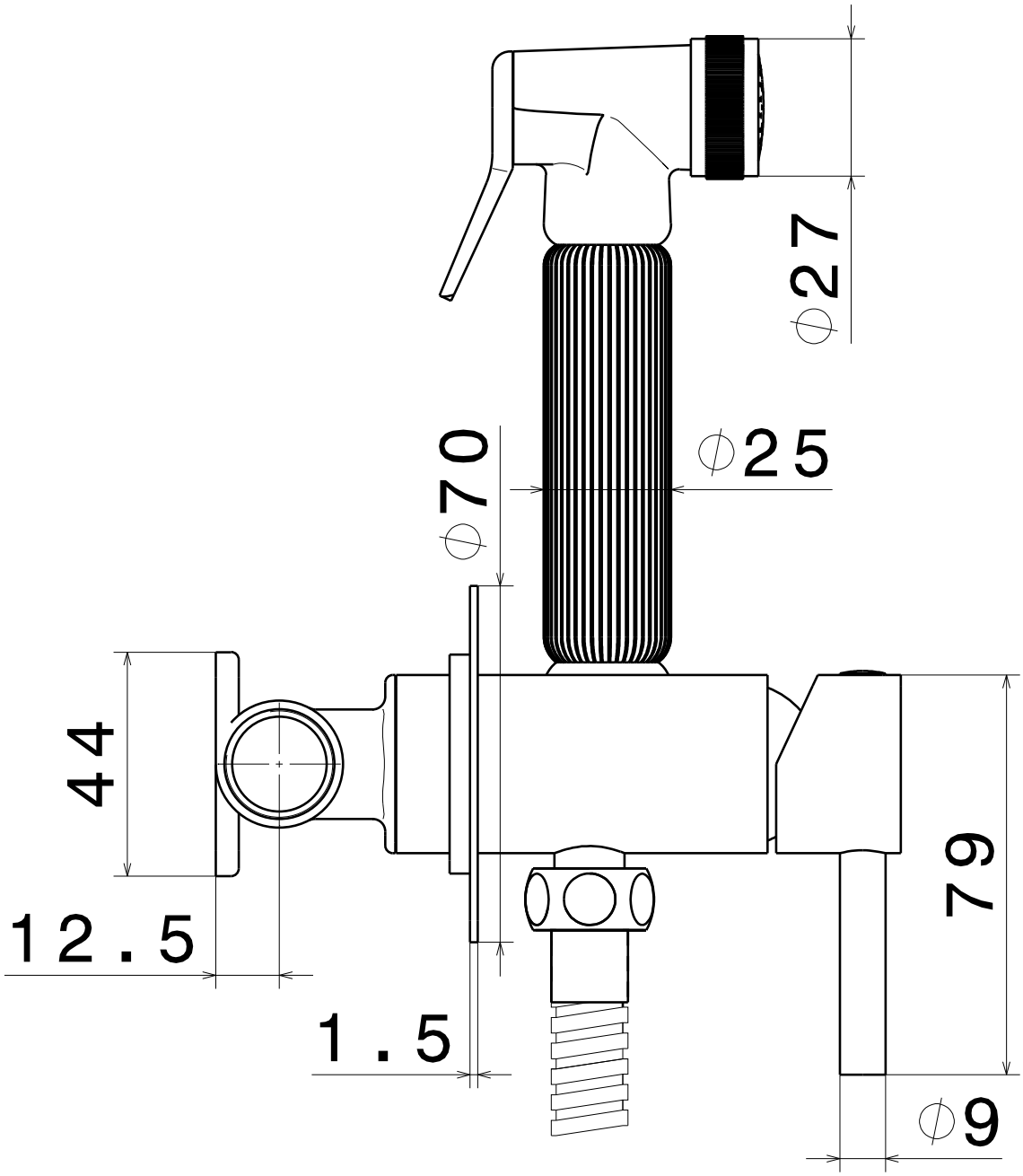
44
12.5
70
1.5
25
27
79
9

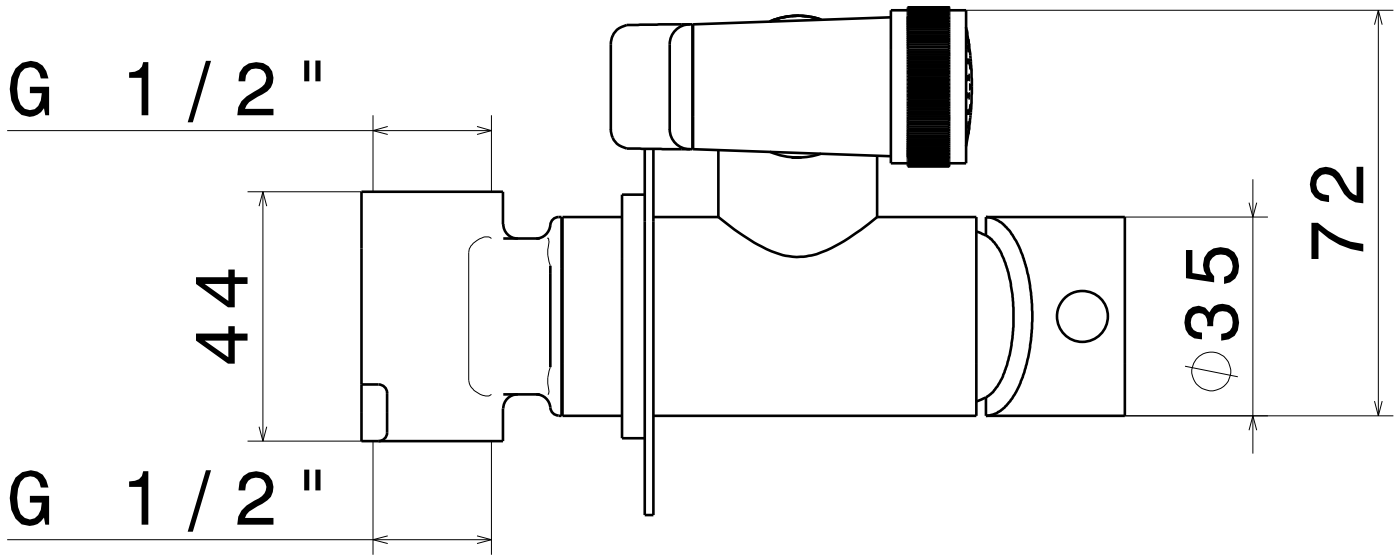
G 1/2"
44
G 1/2"
35
72